Dual Beam Transducers MODEL T28 & T37

- 200 or 210 KHZ DUAL BEAM
- NAVIGATION : FISHING : SURVEYING
- HIGH PERFORMANCE
- SCIENTIFIC ECHO SOUNDING
- HULL OR TOWED BODY
- ROBUST NYLON HOUSING

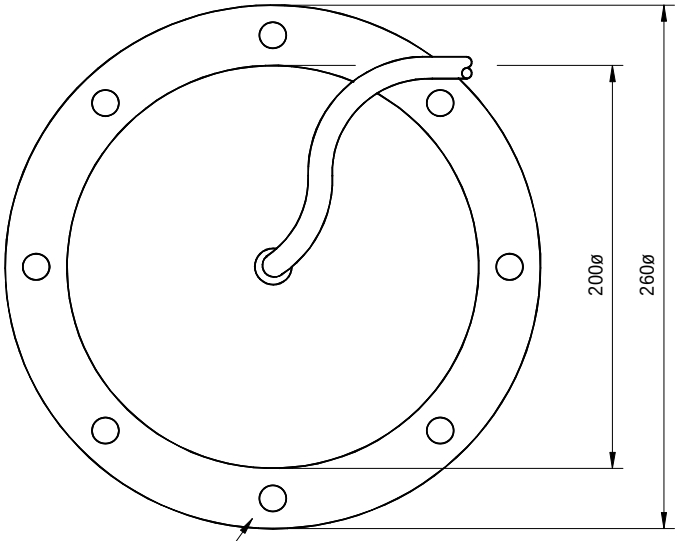

Mounting holes equally spaced on a 230mm P.C.D.

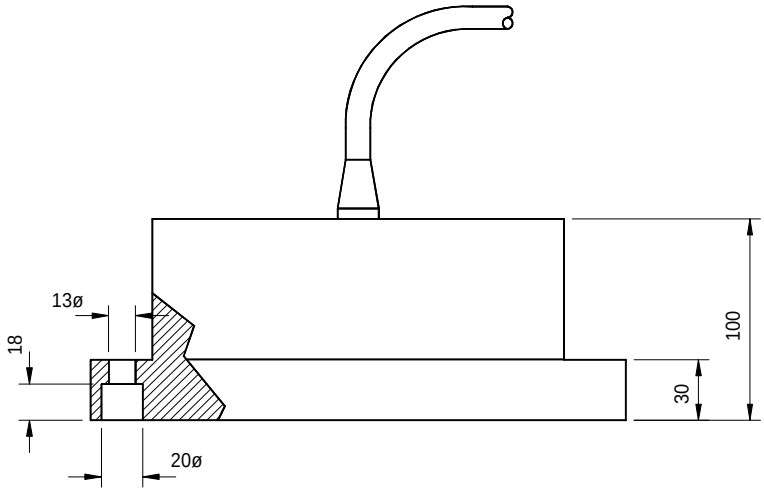

All dimensions in mm

The T28 and T37 are precision echo sounder transducers designed for use in hydrographic or scientific applications where accurately defined beam patterns are needed.

The T28 operating at 210 kHz and the T37 at 200 kHz have identical element patterns configured to achieve narrow and wide conical beams.

A four core screened cable moulded into the rear of the array enables the beams to be switched between wide and narrow patterns using a bridge located selection box.

Originally designed for hull mounting, the tough nylon body is pressure rated down to 250 metres making it suitable for towed body installation.

Single beam versions of both transducers have recently been introduced. These provide the same performance as the narrow beam configuration but with lower side lobe levels.

MODEL T28 & T37 *Dual Beam Transducers*

Technical Specification

Neptune Sonar	**T28**		**T37**		**Type Number**
Resonant Frequency	**210**		**200**		**kHz**
Beam	**Wide**	**Narrow**	**Wide**	**Narrow**	**Selectable**
Horizontal Beam (-3dB)	5.7	2.9	6.0	3.1	Degrees Conical
Transmit Sensitivity	178	183	177	182	dB re uPa/V @ 1m
Receive Sensitivity	-185	-185	-185	-185	dB re V/uPa
Input Power	1600	3000	1600	3000	Watts
Bandwidth	10	10	10	10	kHz
Nominal Impedance	50	50	50	50	Ohms
Transducer Impedance can be adjusted to suit customers specification					
Standard Depth Rating	250 Metres				
Cable Length	10 Metres Standard (Additional lengths supplied to order)				
Cable Type	Polyurethane Ø12mm 4 Core Screened				
Storage Temperature	-40 to +80 °C				
Operating Temperature	-5 to +70 °C				

Data illustrated is taken from actual in-water measurements